LRS–75W单组输出电源
LRS–75W Single output power supply

概述 Summary

> 单组输出：功率75W
Single output: power 75W
> 输入电压：85～264V交流/120–373V直流
Input voltage: 85～264VAC/120～373VDC



常见规格 General Specification

99×97×30mm

性能 Specification / 型号 Model	LRS–75–12	LRS–75–15	LRS–75–24	LRS–75–48
直流输出电压、电流 DC output voltage, current	12V 0～6A	15V 0～5A	24V 0～3.2A	48V 0～1.6A
纹波及噪音 Wave and noise	120mVp–p	120mVp–p	150mVp–p	200mVp–p
进线稳定度 Inlet wire stability	±0.5%	±0.5%	±0.5%	±0.5%
负载稳定度 Load stability	±0.5%	±0.5%	±0.5%	±0.5%
效率 Efficiency	87%	87%	88%	89%
直流电压可调范围 Adjustable range for DC voltage	±10%	±10%	±10%	±10%
输入电压范围 Input voltage range	85～264V交流/120～373V直流 47～63Hz 85～264VAC/120～373VDC 47～63Hz			
冲击电流 Impact current	冷启动电流 50A/230VAC Cold start current			
过载保护 Overload protection	110%～150%切断输出，自动恢复 110%～150% cut off the output, automatic recovery			
其他保护 Otherprotection	过流保护/短路保护 Overcurrent protection / Short–circuit protection			
启动、上升、保持时间 Setup, rise, hold up time	1000ms，30ms/230VAC 2000ms，30ms/115VAC			
耐压性 Withstand voltage	输入输出间：1.5kV 输入与外壳间：1.5kV 输出与外壳间：0.5kV 一分钟 I/P–O/P: 1.5kV I/P–FG:1.5kV O/P–FG: 0.5kV 1minute			
隔离电阻 Isolation resistance	输入输出间 输入与外壳间 输出与外壳间：500VDC/100M I/P–O/P I/P–FG O/P–FG: 100M Ohms / 500VDC / 25℃ /70%RH			
工作温度 Working temperature	–20℃～+70℃			
尺寸 Dimension	99×97×30mm			
重量 Weight	0.3kg			
包装 Packing	42.5×32.5×19.5CM/60PCS/18kg			

外形尺寸 Overall dimension(mm)

- 接 线 位 置
  - 端口1,2：交流输入
  - 端口 3：接地 ⏚
  - 端口 4：直流输出–V
  - 端口 5：直流输出+V
- Terminal Pin No.Assignment
  - Pin 1,2：AC input
  - Pin 3：GND ⏚
  - Pin 4：DC output–V
  - Pin 5：DC output+V

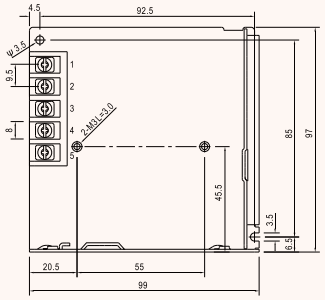

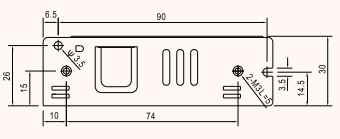

WEHO | LRS-75 | Technical supplement

Load derating and functional diagram

Use within the WEHO stated range: -20 to +70 degrees C. Preserve the input-voltage and mounting conditions on each curve.

Derating Curve

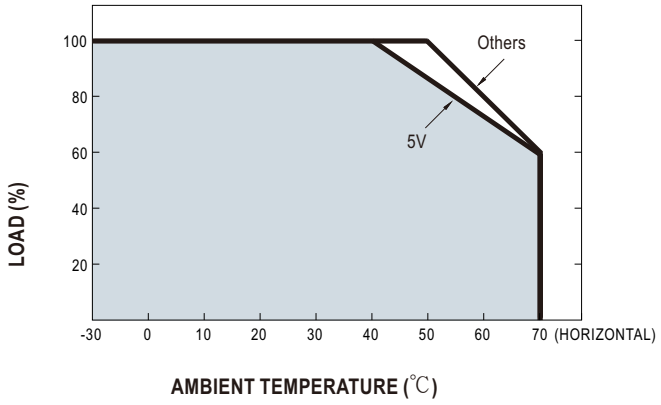

Static Characteristics

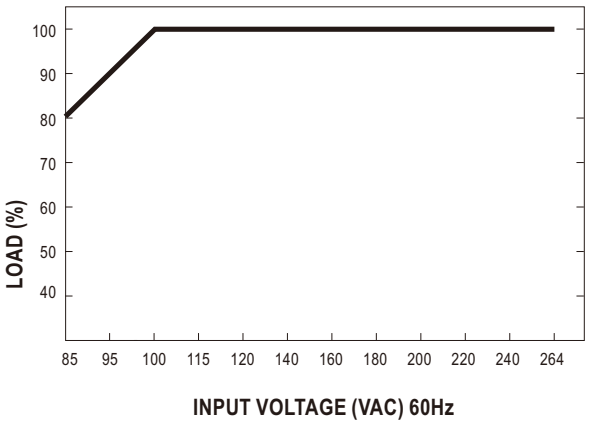

Functional block diagram

Block Diagram

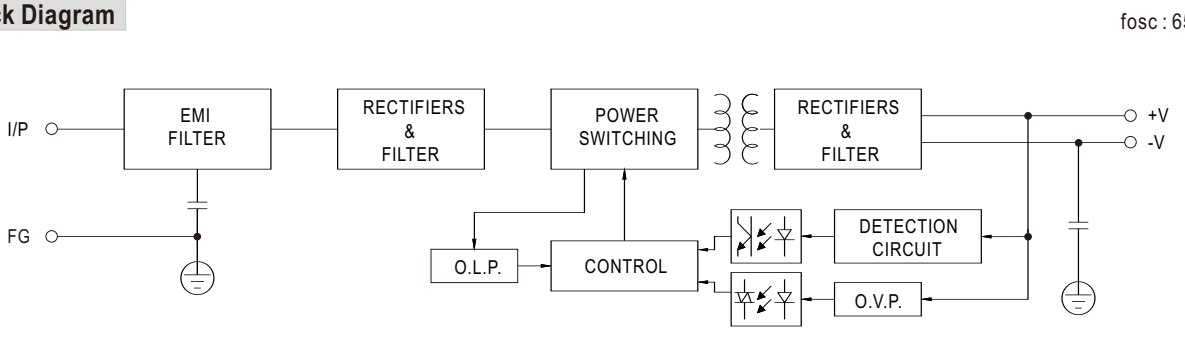

This page supplements the WEHO specification on page 1. It does not expand the stated operating range or change the listed output options, rated values, protection limits or certification statements. Apply the load reduction shown and allow adequate ventilation. A reference axis extending below -20 degrees C does not extend the WEHO product rating.

The model-matched technical reference has been adopted by WEHO for this supplement. It is not a new sample test report. Safety approvals, warranty commitments and test-certificate ownership are not transferred by these charts.