ENCLOSED AC–DC POWER SUPPLY

LRS-35 Series

35 W single-output switching power supply

Five output voltages in a 99 × 82 × 30 mm enclosure.



01 Output ratings

Model	LRS-35-5	LRS-35-12	LRS-35-15	LRS-35-24	LRS-35-48
DC output voltage	5 V	12 V	15 V	24 V	48 V
Output current range	0–7 A	0–3 A	0–2.4 A	0–1.5 A	0–0.8 A
Efficiency	86%	86%	88%	88%	90%
Ripple and noise	120 mV p-p	120 mV p-p	120 mV p-p	150 mV p-p	200 mV p-p
Line regulation	±0.5%	±0.5%	±0.5%	±0.5%	±0.5%
Load regulation	±0.5%	±0.5%	±0.5%	±0.5%	±0.5%
DC voltage adjustment	±10%	±10%	±10%	±10%	±10%

02 Input, protection and insulation

Input voltage	85–264 V AC, 47–63 Hz / 120–373 V DC
Inrush current	45 A at 230 V AC (cold start)
Overload protection	110–150%: output shuts off and recovers automatically.
Other protection	Overcurrent and short-circuit protection
Setup / rise time	230 V AC: 1000 ms / 30 ms; 115 V AC: 2000 ms / 30 ms. Hold-up time is not specified.
Withstand voltage	Input–output: 1.5 kV; input–FG: 1.5 kV; output–FG: 0.5 kV (1 min).
Insulation resistance	Input–output, input–FG and output–FG: 100 MΩ at 500 V DC, 25 °C and 70% RH.

03 Operating and mechanical data

Operating temperature	−20 to +70 °C (see derating curves on page 2)
Dimensions (L × W × H)	99 × 82 × 30 mm
Unit weight	0.23 kg
Packing	44 × 36.5 × 19.5 cm; 80 units per carton; 16 kg per carton

04 Mechanical outline

Dimensions in millimetres

Terminal layout and mounting holes

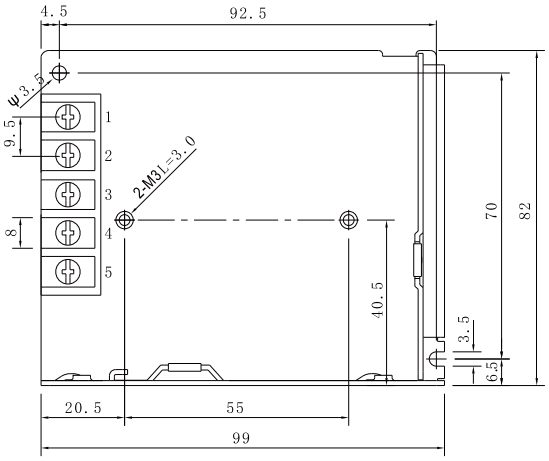

Side mounting holes

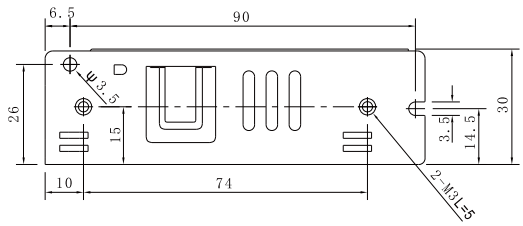

Overall length x width x height

99 x 82 x 30 mm

Terminal assignments

Pins 1, 2: AC input

Pin 3: Protective earth

Pin 4: DC −V

Pin 5: DC +V

05 Load derating

Ambient temperature

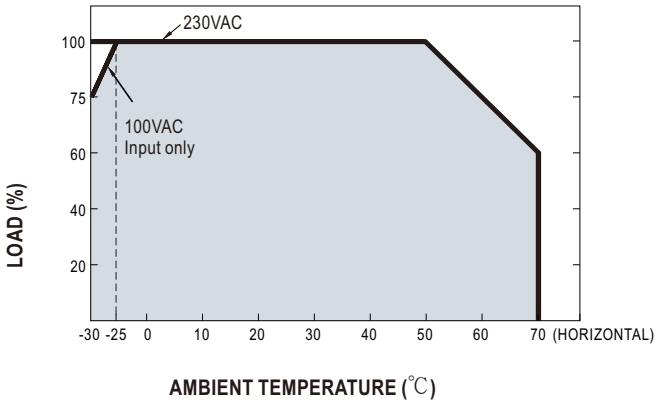

AC input voltage

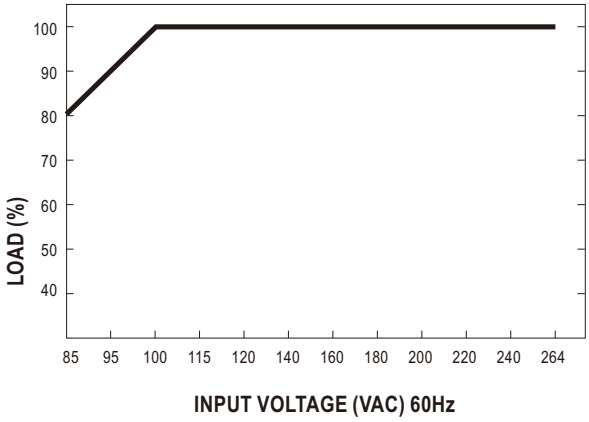

Apply the curves within the rated range: −20 to +70 °C and 85–264 V AC. The reference axis below −20 °C does not extend the rating. Observe the input and mounting conditions and allow for ventilation.

06 Functional block diagram

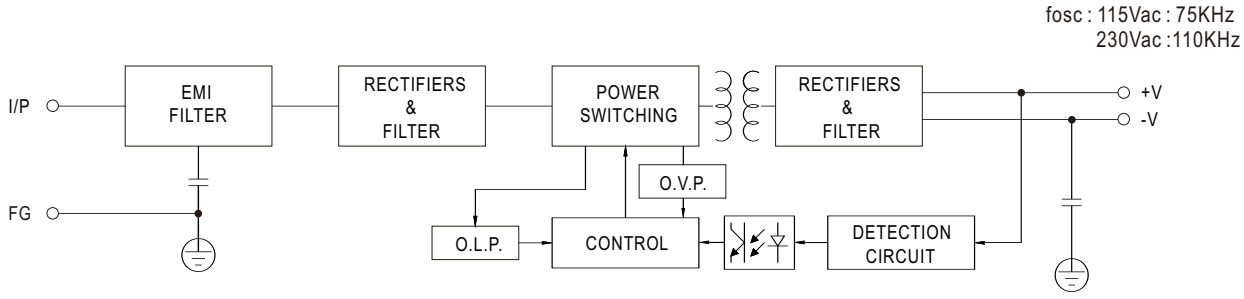

These model-matched reference diagrams are not a new sample test report. They do not change the listed ratings or protection limits, or confer safety approvals, warranty coverage or certificate ownership.