LRS–600W单组输出电源
LRS–600W Single output power supply



概述 Summary

> 单组输出：功率600W
Single output: power 600W

> 输入电压: 90～132V交流/180～264V交流 由开关切换 255～370V直流
Input voltage: 90–132V AC/180–264V AC switched by switch 255–370V DC

常见规格 General Specification

225×144×41mm

性能 Specification / 型号 Model	LRS–600–5	LRS–600–12	LRS–600–15	LRS–600–24	LRS–600–36	LRS–600–48
直流输出电压、电流 DC output voltage, current	5V 0～100A	12V 0～50A	15V 0～40A	24V 0～25A	36V 0～16.6A	48V 0～12.5A
纹波及噪音 Wave and noise	200mVp–p	200mVp–p	240mVp–p	240mVp–p	360mVp–p	360mVp–p
进线稳定度 Inlet wire stability	±0.5%	±0.5%	±0.5%	±0.5%	±0.5%	±0.5%
负载稳定度 Load stability	±2.0%	±1.0%	±0.5%	±0.5%	±0.5%	±0.5%
效率 Efficiency	86%	90%	90%	91%	92%	92%
电压可调范围 Adjustable voltage range	4.75~5.5V	11.4~13.2V	14.25~16.5V	22.8~26.4V	34.2~39.6V	45.6~52.8V
输入电压范围 Input voltage range	90～132V交流/180～264V交流 由开关切换 255～370V直流（开关开启230VAC) 47～63Hz 90～132VAC/180～264VAC by switch 255～370VDC (Switch on 230VAC) 47～63Hz					
输入电流 Input current	12A/115VAC 7.5A/230VAC 浪涌电流(冷启动)35A/115VAC 60A/230VAC 漏电流<0.7mA @ 240V 12A/115VAC 7.5A/230VAC Surge current: (cold start) 35A/115VAC 60A/230VAC Leakage current:<0.7mA @ 240V					
过载保护 Overload protection	额定输出功率的105%–150%，保护模式:打嗝模式，异常模式移除后可自动恢复 105% –150% of rated output power, protection mode: hiccup mode, automatic recovery after removing abnormal mode					
过压保护 Overvoltage protection	5.7–6.7V	13.8–16.2V	18–21V	28.8–33.6V	41.4–48.6V	55.2–64.8V
	保护模式:打嗝模式，异常模式移除后可自动恢复 Protection mode: Hiccup mode, automatic recovery after removing abnormal mode					
短路保护 Short circuit protection	输出端子短路，保护模式:打嗝模式，异常模式移除后可自动恢复 Output terminal short circuit, protection mode: hiccup mode, automatic recovery after removing abnormal mode					
过温保护 Over temperature protection	具有过温保护，温度恢复正常后，自动恢复 Equipped with over temperature protection, it automatically recovers once the temperature returns to normal					
启动、上升、保持时间 Setup, rise, hold up time	1300ms, 50ms/230VAC 1300ms, 50ms/115VAC 满负载 at full load					
耐压性 Withstand voltage	I/P–O/P:4KVAC I/P–FG:2KVAC O/P–FG: 1.25KVAC					
绝缘阻抗 Insulation resistance	I/P–O/P,I/P–FG.O/P–FG:100M Ohm/500VDC					
工作温度/湿度 Working temperature/humidity	–30℃~+70℃/20–90%RH，无冷凝 储存：–40℃~+85℃/10–95%RH，无冷凝 –30 ℃~+70 ℃/20–90% RH, non condensing, storage: –40 ℃~+85 ℃/10–95% RH, non condensing					
尺寸 Dimension	225×115×50mm					
重量 Weight	0.95kg					
包装 Packing	45.5×31.5×26CM/20PCS/20kg					

外形尺寸 Overall dimension(mm)

端子脚位定义

引脚编号	引脚功能	引脚编号	引脚功能
1	AC/L	4~6	DC OUTPUT –V
2	AC/N	7~9	DC OUTPUT +V
3	FG ⏚		

Terminal pin position definition

Pin number	Pin function	Pin number	Pin function
1	AC/L	4~6	DC OUTPUT –V
2	AC/N	7~9	DC OUTPUT +V
3	FG ⏚		

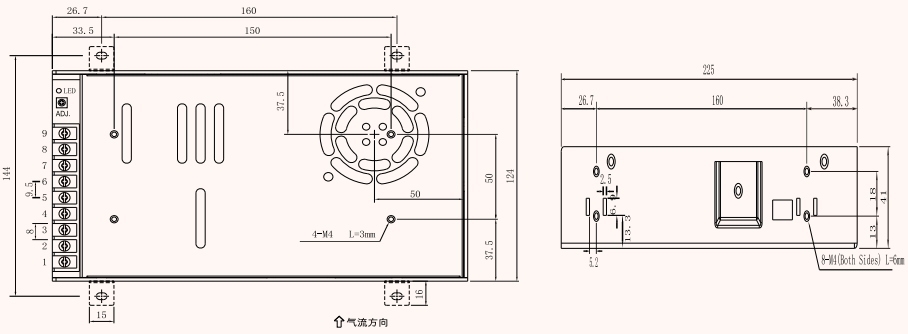

WEHO | LRS-600 | Technical supplement

Load derating and functional diagram

Curve guidance covers -20 to +65 degrees C only. Do not extrapolate into unplotted parts of the WEHO -30 to +70 degrees C operating range.

Derating Curve

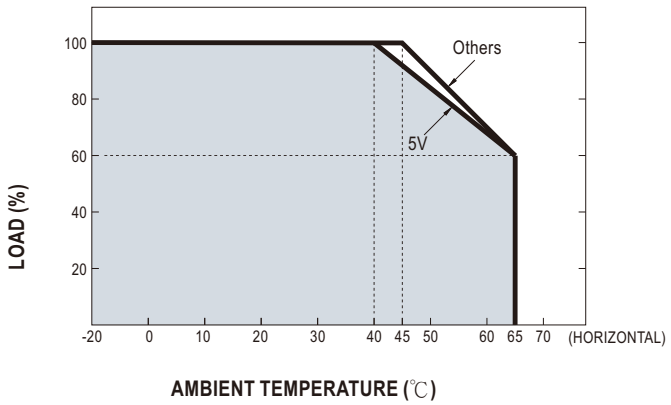

Static Characteristics

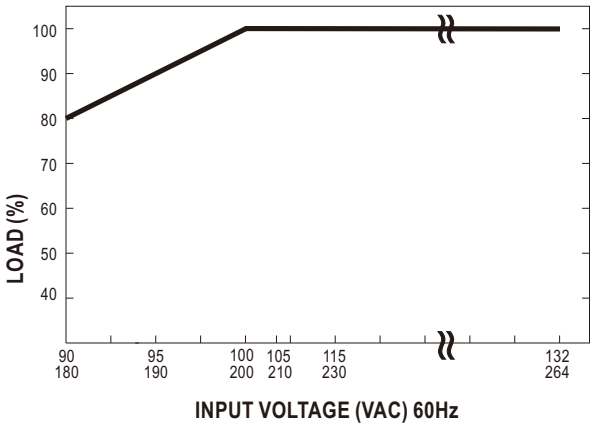

Functional block diagram

Block Diagram

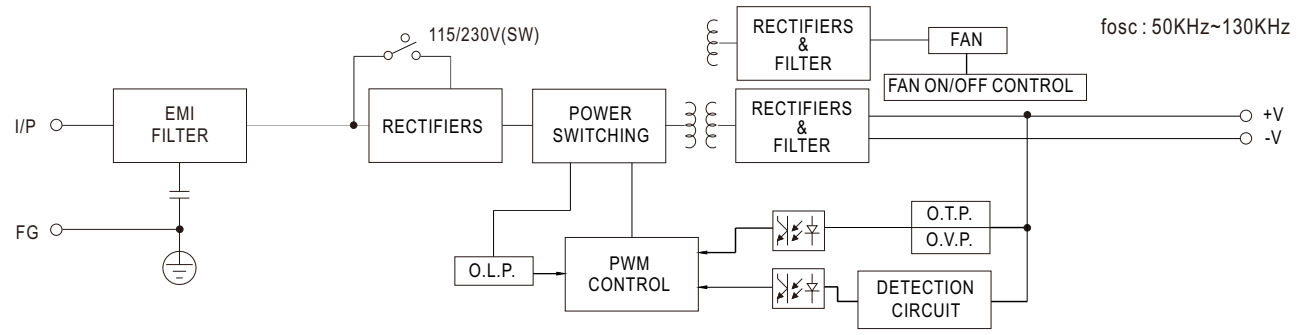

Use the 5V trace for 5V outputs and Others for the remaining listed outputs. The curves do not establish load limits for unplotted temperatures outside -20 to +65 degrees C.

Load is shown as a percentage. Use the WEHO output table for absolute voltage and current limits. Observe the frequency, input-selector position and horizontal mounting labels. Adequate ventilation is required. The charts do not expand rated output, protection limits or certification statements.