DR-75

Single-output DIN rail power supply

55.5 × 125.2 × 100 mm / 75 W class



Pictured sample: DR-75-24

Output selection

Model	DR-75-12	DR-75-15	DR-75-24	DR-75-48
DC output	12 V	15 V	24 V	48 V
DC current range	0–6.3 A	0–5 A	0–3.2 A	0–1.6 A
Efficiency	76%	80%	80%	81%
Ripple and noise	100 mV p-p	150 mV p-p	150 mV p-p	240 mV p-p
Line regulation	±0.5%	±0.5%	±0.5%	±0.5%
Load regulation	±0.5%	±0.5%	±0.5%	±0.5%
DC voltage adjustment	±10%	±10%	±10%	±10%

Input and operating specifications

Parameter	Specification
Input voltage	85–264 VAC / 120–370 VDC
AC input frequency	47–63 Hz
Cold-start inrush	20 A at 115 VAC; 40 A at 230 VAC
Overload protection	105–150%; output cuts off and recovers automatically.
Overvoltage protection	121–142%; output shuts down. Cycle input power to recover.
Setup / rise / hold-up	1000 / 60 / 60 ms at 230 VAC, full load
Withstand voltage (1 min)	Input/output: 1.5 kV; input/FG: 1.5 kV; output/FG: 0.5 kV.
Insulation resistance	100 MΩ at 500 VDC: input/output, input/FG and output/FG.
Working temperature	−10 °C to +50 °C

Mechanical dimensions

55.5 × 125.2 × 100 mm / drawing dimensions in millimetres

Original dimensioned views from the DR-75 manufacturer sheet.

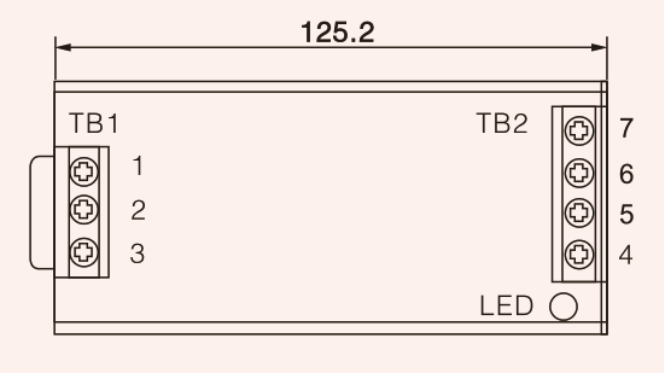

Terminal face

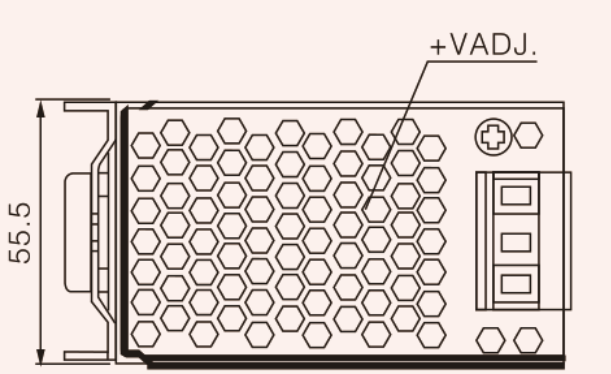

Vent face

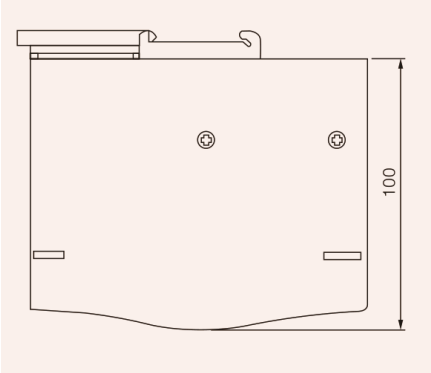

Side profile

Mechanical data

Body: 55.5 × 125.2 × 100 mm

Unit weight: 0.55 kg

Packing:

42 × 25 × 24 cm / 24 pcs / 13.5 kg

Terminals and installation

Pins 1 and 2: AC input; 3: ground; 4 and 5: −V; 6 and 7: +V. The sheet groups the AC pair; identify L and N from the markings on the unit.

The sheet identifies a DIN rail mount but does not specify the rail profile. Verify the clip and rail before installation.

Isolate the input before mounting or wiring. Use the terminal markings on the unit.

Allow room for conductors, terminal access and heat dissipation.

The working temperature range is not a full-load derating curve.