EDR-240

Single-output DIN rail power supply

Output selection

Parameter	EDR-240-24	EDR-240-48
DC voltage	24 V	48 V
DC output current	0–10 A	0–5 A
Efficiency	86%	87.5%
Ripple and noise	150 mV p-p	150 mV p-p
Line regulation	±0.5%	±0.5%
Load regulation	±1%	±1%
DC voltage adjustment	±10%	±10%

Operating conditions

AC / DC input	90–264 VAC / 127–370 VDC
Family power class	240 W (single output)
Input frequency	47–63 Hz
Cold-start inrush	20 A at 115 VAC; 35 A at 230 VAC
Overload protection	105–130%: output cutoff; automatic recovery.
Overvoltage protection	115–140% of rated output power (sheet wording); output shuts down. Reapply power to recover. No voltage trip level is specified.
Setup / rise	1500 / 100 ms at 230 VAC; 3000 / 100 ms at 115 VAC, full load. Hold-up time is not specified.
Withstand voltage	Input/output: 1.5 kV; input/FG: 1.5 kV; output/FG: 0.5 kV; 1 minute.
Insulation resistance	Input/output, input/FG and output/FG: 100 MΩ at 500 VDC, 25 °C and 70% RH.

EDR-240

Mechanical dimensions and installation

63 × 125.2 × 113.5 mm

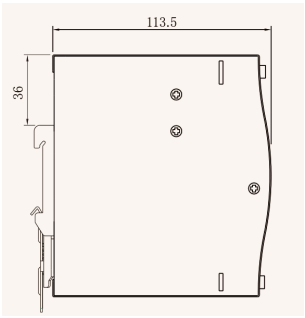

Side elevation

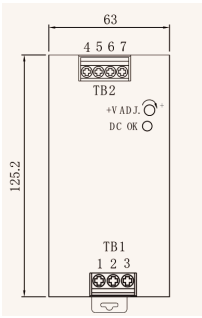

Front elevation

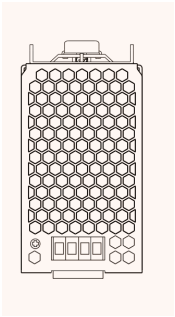

Top view

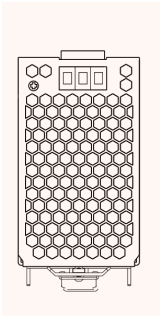

Bottom view

Working environment	−20 to +60 °C
Unit weight	0.92 kg
Packing	42.5 × 29 × 27.5 cm / 24 pcs / 22 kg
Terminal assignments	TB1: 1 = FG; 2 = AC/N or DC −; 3 = AC/L or DC +.
Technical note	TB2: 4 and 5 = −V; 6 and 7 = +V.