ENCLOSED AC-DC POWER SUPPLY

LRS-350 Series

350 W series | Single-output switching power supply

Output options: 5, 12, 15, 24, 48 V DC



01 Output ratings

Model	LRS-350-5	LRS-350-12	LRS-350-15	LRS-350-24	LRS-350-48
DC output voltage	5 V	12 V	15 V	24 V	48 V
Output current range	0-70 A	0-29 A	0-23.2 A	0-14.6 A	0-7.3 A
Efficiency	85%	85%	86%	88%	89%
Ripple and noise	150 mV p-p	150 mV p-p	150 mV p-p	150 mV p-p	200 mV p-p
Line regulation	±0.5%	±0.5%	±0.5%	±0.5%	±0.5%
Load regulation	±0.5%	±0.5%	±0.5%	±0.5%	±0.5%
DC voltage adjustment	±10%	±10%	±10%	±10%	±10%

02 Input, protection and insulation

Input voltage	90-132 / 180-264 V AC (switch-selectable), 47-63 Hz; 240-370 V DC
Inrush current	60 A at 230 V AC (cold start)
Overload protection	110-150%: output shuts off; automatic recovery.
Overvoltage protection	115-140% of "rated output power" as printed; voltage threshold not specified. Hiccup mode; automatic recovery after fault removal.
Setup / rise time	230 V AC: 1500 / 50 ms; 115 V AC: 1500 / 50 ms. Hold-up time not specified.
Withstand voltage	Input-output: 1.5 kV; input-FG: 1.5 kV; output-FG: 0.5 kV (1 min).
Insulation resistance	100 MOhm at 500 V DC, input-output / input-FG / output-FG; 25 °C, 70% RH.

03 Operating and mechanical data

Operating temperature	-20 to +70 °C; see derating conditions on page 2.
Dimensions (L × W × H)	215 × 115 × 30 mm
Unit weight	0.76 kg
Packing	37.5×25×26 cm; 20 pcs; 16 kg

04 Mechanical outline

Dimensions in millimetres

Terminal layout and mounting holes

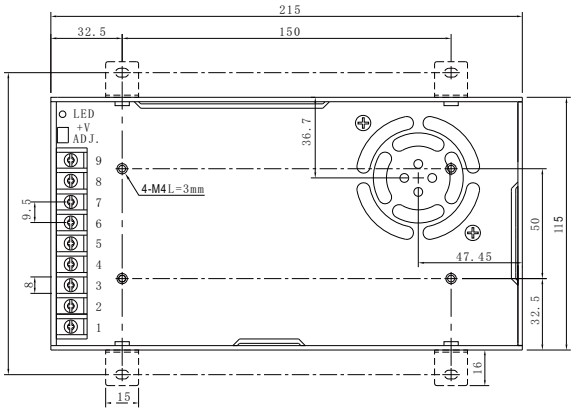

Side mounting holes

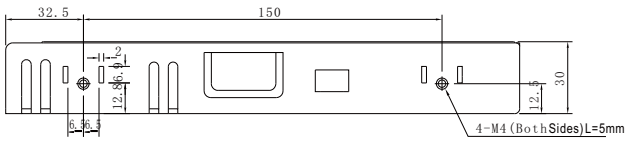

Drawing: body length × width × height

215 × 115 × 30 mm

135 mm across mounting ears.

Terminal assignments

AC input	Protective earth	DC output -V	DC output +V
Pins 1, 2	Pin 3	Pins 4, 5, 6	Pins 7, 8, 9

05 Load derating

Ambient temperature

Derating Curve

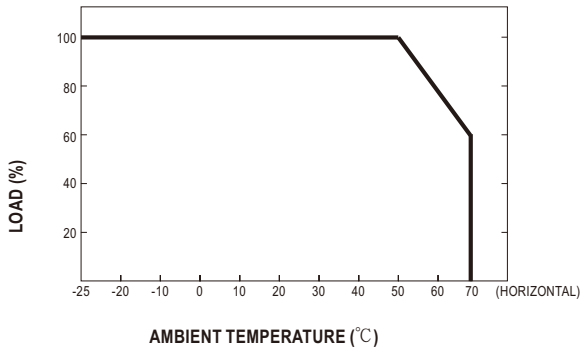

AC input voltage

Static Characteristics

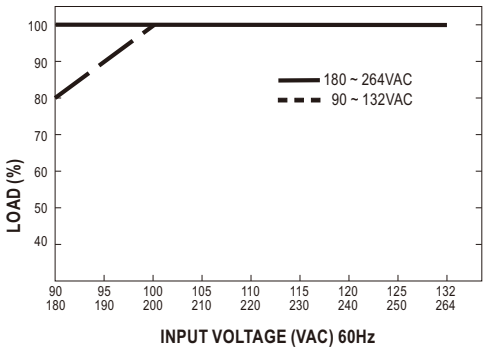

The curves show percentage load, not a separate 5 V rating. Observe both input bands. Use within -20 to +70 °C and the input limits on page 1. Follow the plotted frequency and mounting conditions.

06 Functional block diagram

Block Diagram

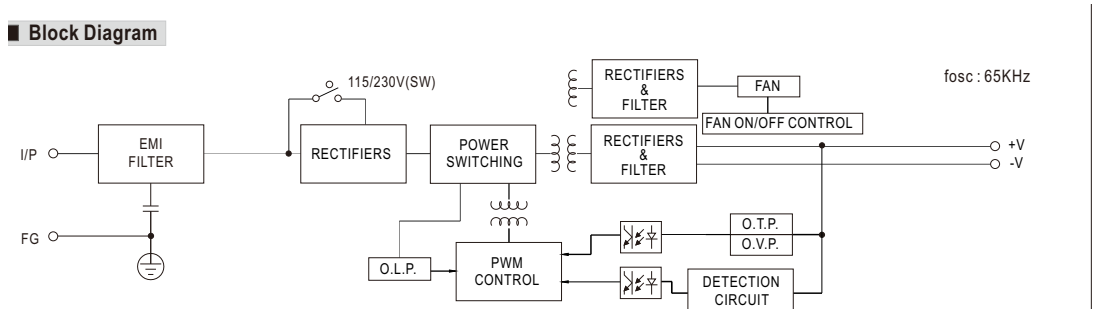

These model-matched reference diagrams do not establish new output ratings, protection limits, test results, certifications or warranty coverage.