ENCLOSED AC-DC POWER SUPPLY

LRS-450 Series

Single-output switching power supply

Output options: 12, 24, 36, 48 V DC



01 Output ratings

Model	LRS-450-12	LRS-450-24	LRS-450-36	LRS-450-48
DC output voltage	12 V	24 V	36 V	48 V
Output current range	0-37.5 A	0-18.7 A	0-12.5 A	0-9.4 A
Efficiency	82%	85%	86%	87%
Ripple and noise	150 mV p-p	180 mV p-p	240 mV p-p	240 mV p-p
Line regulation	±0.5%	±0.5%	±0.5%	±0.5%
Load regulation	±1%	±0.5%	±0.5%	±0.5%
DC voltage adjustment	±10%	±10%	±10%	±10%

02 Input, protection and insulation

Input voltage	95-132 / 180-264 V AC (switch-selectable), 47-63 Hz; 254-370 V DC
Inrush current	35 A at 115 V AC; 65 A at 230 V AC (cold start)
Overload protection	105-150%: output shuts off; hiccup mode, automatic recovery.
Overvoltage protection	115-135% of "rated output power" as printed; voltage threshold not specified. Hiccup mode; automatic recovery after fault removal.
Overtemperature	Output shuts off; recovers when temperature returns to normal.
Setup / rise time	230 V AC: 1500 / 30 ms; 115 V AC: 2000 / 50 ms (full load). Hold-up time not specified.
Withstand voltage	Input-output: 1.5 kV; input-FG: 1.5 kV; output-FG: 0.5 kV (1 min).
Insulation resistance	100 MOhm at 500 V DC, input-output / input-FG / output-FG; 25 °C, 70% RH.

03 Operating and mechanical data

Operating temperature	-10 to +50 °C; see derating conditions on page 2.
Dimensions (L × W × H)	215 × 115 × 50 mm
Unit weight	1 kg
Packing	45.5×31.5×26 cm; 20 pcs; 20 kg

The title states 450 W; the summary states 500 W. Confirm rated power for the selected output.

04 Mechanical outline

Dimensions in millimetres

Terminal layout and mounting holes

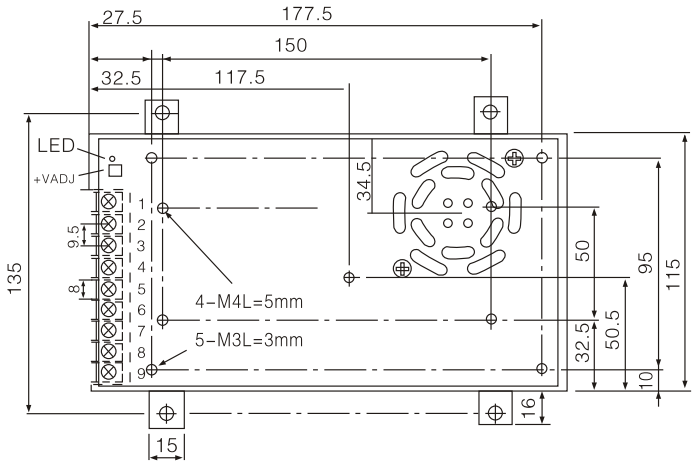

Side mounting holes

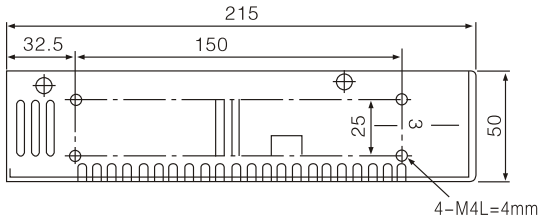

Drawing: body length × width × height

215 × 115 × 50 mm

135 mm across mounting ears.

Terminal assignments

AC input	Protective earth	DC output -V	DC output +V
Pins 8, 9	Pin 7	Pins 4, 5, 6	Pins 1, 2, 3

05 Load derating

Ambient temperature

Derating Curve

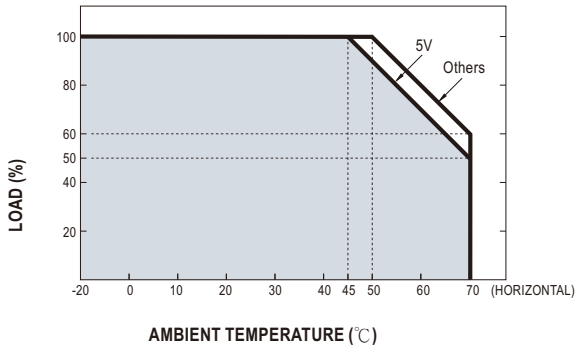

AC input voltage

Static Characteristics

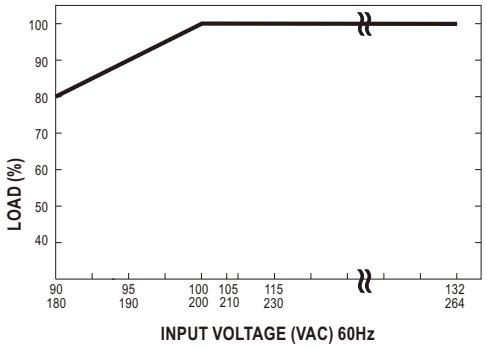

Use Others for all four catalogue outputs. The printed 5 V branch does not apply: 5 V is not offered. Use within -10 to +50 °C and the input limits on page 1. Follow the plotted frequency and mounting conditions.

06 Functional block diagram

Block Diagram

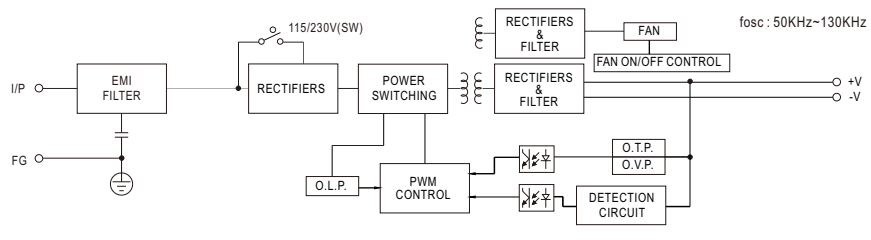

These model-matched reference diagrams do not establish new output ratings, protection limits, test results, certifications or warranty coverage.