ENCLOSED AC-DC POWER SUPPLY

LRS-500 Series

500 W series | Single-output switching power supply

Output options: 12, 24, 36, 48 V DC



01 Output ratings

Model	LRS-500-12	LRS-500-24	LRS-500-36	LRS-500-48
DC output voltage	12 V	24 V	36 V	48 V
Output current range	0-40 A	0-20 A	0-14 A	0-10 A
Efficiency	82%	86%	87%	88%
Ripple and noise	150 mV p-p	180 mV p-p	240 mV p-p	240 mV p-p
Line regulation	±0.5%	±0.5%	±0.5%	±0.5%
Load regulation	±1%	±0.5%	±0.5%	±0.5%
DC voltage adjustment	±10%	±10%	±10%	±10%

02 Input, protection and insulation

Input voltage	95-132 / 180-264 V AC (switch-selectable), 47-63 Hz; 254-370 V DC
Inrush current	35 A at 115 V AC; 65 A at 230 V AC (cold start)
Overload protection	110-135%: output shuts off; hiccup mode, automatic recovery.
Overvoltage protection	115-135% of "rated output power" as printed; voltage threshold not specified. Hiccup mode; automatic recovery after fault removal.
Setup / rise time	230 V AC: 1500 / 30 ms; 115 V AC: 2000 / 50 ms. Hold-up time not specified.
Withstand voltage	Input-output: 1.5 kV; input-FG: 1.5 kV; output-FG: 0.5 kV (1 min).
Insulation resistance	100 MOhm at 500 V DC, input-output / input-FG / output-FG; 25 °C, 70% RH.

03 Operating and mechanical data

Operating temperature	-10 to +50 °C; full load is not specified across this range.
Dimensions (L × W × H)	215 × 115 × 50 mm
Unit weight	1 kg
Packing	45.5×31.5×26 cm; 20 pcs; 20 kg

04 Mechanical outline

Dimensions in millimetres

Terminal layout and mounting holes

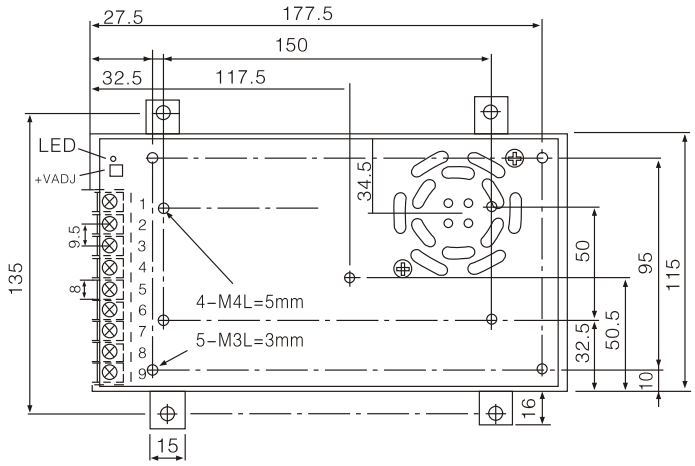

Side mounting holes

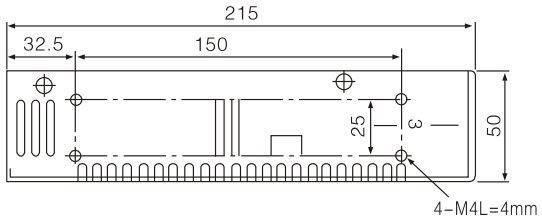

Drawing: body length × width × height

215 × 115 × 50 mm

135 mm across mounting ears.

Terminal assignments

AC input	Protective earth	DC output -V	DC output +V
Pins 8, 9	Pin 7	Pins 4, 5, 6	Pins 1, 2, 3

05 Mounting reference

Body length	215 mm
Body width	115 mm
Body height	50 mm
Across mounting ears	135 mm

06 Operating limits

5 V is not offered in the current catalogue.

The operating temperature range is -10 to +50 °C. No model-specific derating curve is included. Confirm allowable load at the intended input voltage and ambient temperature. The stated range is not a full-load rating.