ENCLOSED AC-DC POWER SUPPLY

LRS-600 Series

600 W series | Single-output switching power supply

Output options: 12, 15, 24, 36, 48 V DC



01 Output ratings

Model	LRS-600-12	LRS-600-15	LRS-600-24	LRS-600-36	LRS-600-48
DC output voltage	12 V	15 V	24 V	36 V	48 V
Output current range	0-50 A	0-40 A	0-25 A	0-16.6 A	0-12.5 A
Efficiency	90%	90%	91%	92%	92%
Ripple and noise	200 mV p-p	240 mV p-p	240 mV p-p	360 mV p-p	360 mV p-p
Line regulation	±0.5%	±0.5%	±0.5%	±0.5%	±0.5%
Load regulation	±1%	±0.5%	±0.5%	±0.5%	±0.5%
DC voltage adjustment	11.4-13.2 V	14.25-16.5 V	22.8-26.4 V	34.2-39.6 V	45.6-52.8 V
Overvoltage protection	13.8-16.2 V	18-21 V	28.8-33.6 V	41.4-48.6 V	55.2-64.8 V

02 Input, protection and insulation

Input voltage	90-132 / 180-264 V AC (switch-selectable), 47-63 Hz; 255-370 V DC (switch at 230 V AC)
Inrush current	35 A at 115 V AC; 60 A at 230 V AC (cold start)
Input / leakage current	12 A at 115 V AC; 7.5 A at 230 V AC. Leakage: <0.7 mA at 240 V.
Overload protection	105-150% of rated output power; hiccup mode, automatic recovery.
Protection modes	Overvoltage / short circuit: hiccup, automatic recovery after fault removal. Overtemperature: automatic recovery at normal temperature.
Setup / rise time	230 V AC: 1300 / 50 ms; 115 V AC: 1300 / 50 ms (full load). Hold-up time not specified.
Withstand voltage	Input-output: 4 kV AC; input-FG: 2 kV AC; output-FG: 1.25 kV AC.
Insulation resistance	100 MOhm at 500 V DC, input-output / input-FG / output-FG.

03 Operating and mechanical data

Operating temperature	-30 to +70 °C; see derating conditions on page 2.
Humidity / storage	Operating: 20-90% RH. Storage: -40 to +85 °C, 10-95% RH. Non-condensing.
Dimensions (L × W × H)	Conflicting dimensions; see the three references on page 2.
Unit weight	0.95 kg
Packing	45.5×31.5×26 cm; 20 pcs; 20 kg

04 Mechanical outline

Dimensions in millimetres

Terminal layout and mounting holes

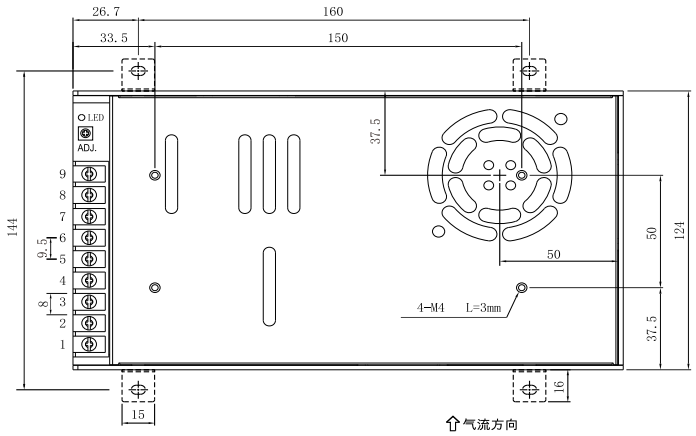

Side mounting holes

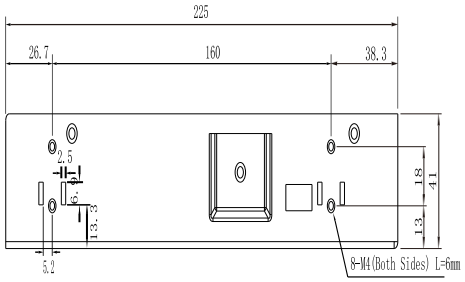

Drawing: body length × width × height

225 × 124 × 41 mm

144 mm across mounting ears.

Dimension row: 225 × 115 × 50 mm; heading: 225 × 144 × 41 mm. Confirm fit. Arrow: airflow direction.

Terminal assignments

AC input	Protective earth	DC output -V	DC output +V
Pins 1 (L), 2 (N)	Pin 3	Pins 4, 5, 6	Pins 7, 8, 9

05 Load derating

Ambient temperature

Derating Curve

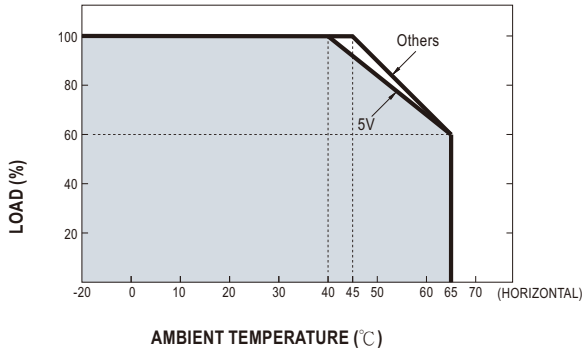

AC input voltage

Static Characteristics

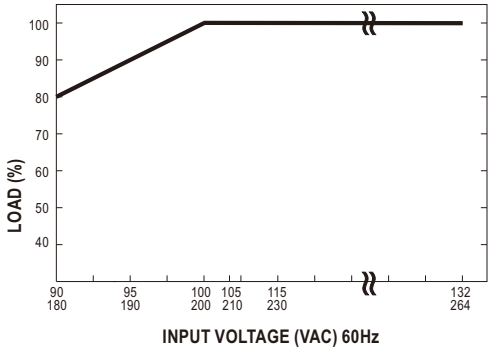

Use Others for all five catalogue outputs. The printed 5 V branch does not apply: 5 V is not offered. Use within -20 to +65 °C only; do not extrapolate to -30 or +70 °C and the input limits on page 1. Follow the plotted frequency and mounting conditions.

06 Functional block diagram

Block Diagram

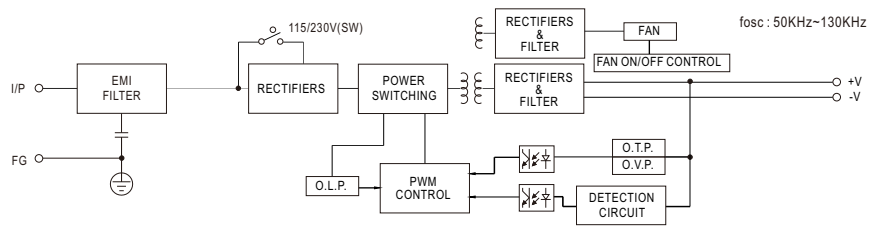

These model-matched reference diagrams do not establish new output ratings, protection limits, test results, certifications or warranty coverage.