ENCLOSED AC-DC POWER SUPPLY

LRS-75 Series

75 W series | Single-output switching power supply

Output options: 5, 12, 15, 24, 48 V DC



01 Output ratings

Model	LRS-75-5	LRS-75-12	LRS-75-15	LRS-75-24	LRS-75-48
DC output voltage	5 V	12 V	15 V	24 V	48 V
Output current range	0-15 A	0-6 A	0-5 A	0-3.2 A	0-1.6 A
Efficiency	87%	87%	87%	88%	89%
Ripple and noise	120 mV p-p	120 mV p-p	120 mV p-p	150 mV p-p	200 mV p-p
Line regulation	±0.5%	±0.5%	±0.5%	±0.5%	±0.5%
Load regulation	±0.5%	±0.5%	±0.5%	±0.5%	±0.5%
DC voltage adjustment	±10%	±10%	±10%	±10%	±10%

02 Input, protection and insulation

Input voltage	85-264 V AC, 47-63 Hz; 120-373 V DC
Inrush current	50 A at 230 V AC (cold start)
Overload protection	110-150%: output shuts off; automatic recovery.
Other protection	Overcurrent protection / Short-circuit protection
Setup / rise time	230 V AC: 1000 / 30 ms; 115 V AC: 2000 / 30 ms. Hold-up time not specified.
Withstand voltage	Input-output: 1.5 kV; input-FG: 1.5 kV; output-FG: 0.5 kV (1 min).
Insulation resistance	100 MOhm at 500 V DC, input-output / input-FG / output-FG; 25 °C, 70% RH.

03 Operating and mechanical data

Operating temperature	-20 to +70 °C; see derating conditions on page 2.
Dimensions (L × W × H)	99 × 97 × 30 mm
Unit weight	0.3 kg
Packing	42.5×32.5×19.5 cm; 60 pcs; 18 kg

04 Mechanical outline

Dimensions in millimetres

Terminal layout and mounting holes

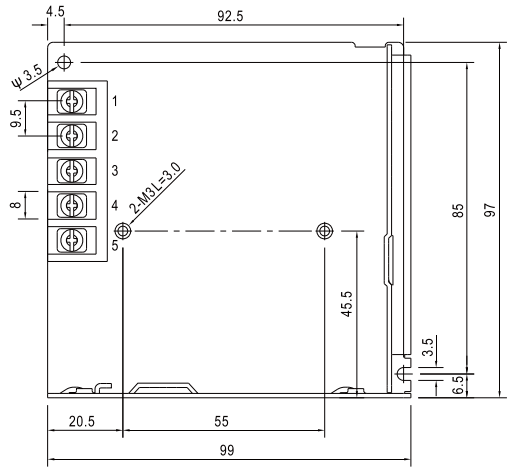

Side mounting holes

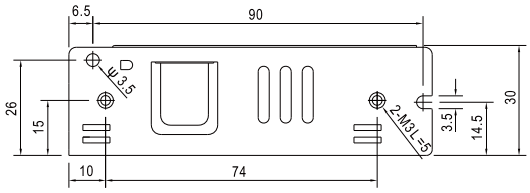

Overall length × width × height

99 × 97 × 30 mm

Terminal assignments

AC input	Protective earth	DC output -V	DC output +V
Pins 1, 2	Pin 3	Pin 4	Pin 5

05 Load derating

Ambient temperature

Derating Curve

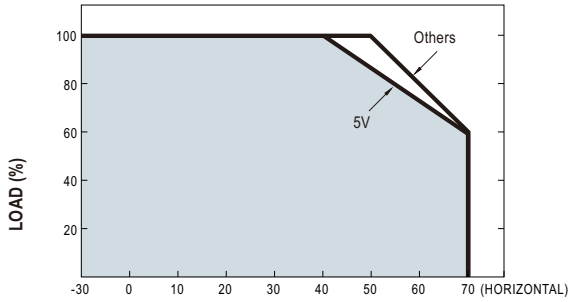

AC input voltage

Static Characteristics

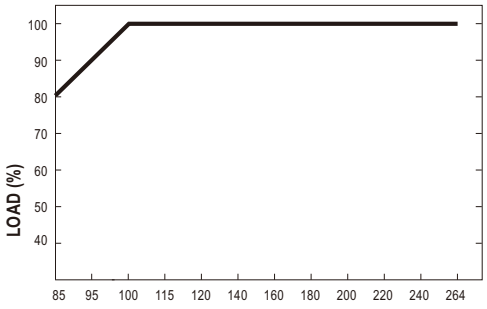

For 5 V, use the 5 V trace; for 12, 15, 24 and 48 V, use Others. Use within -20 to +70 °C and the input limits on page 1. Follow the plotted frequency and mounting conditions. Percentage load does not establish the 5 V current rating.

06 Functional block diagram

Block Diagram

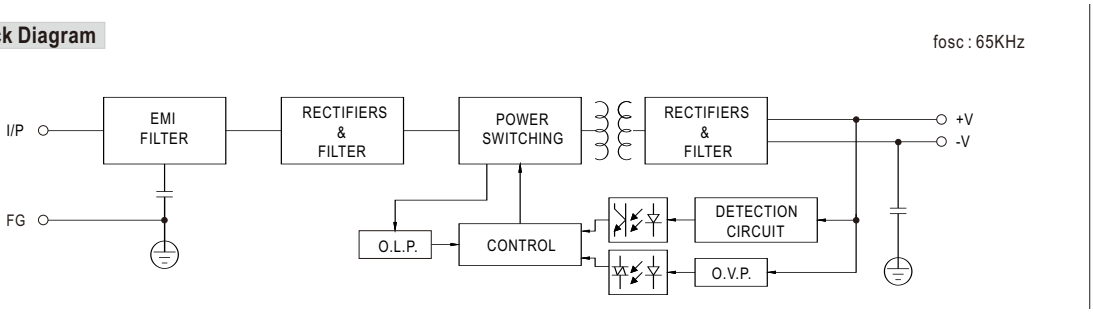

These model-matched reference diagrams do not establish new output ratings, protection limits, test results, certifications or warranty coverage.