MDR-10

Single-output DIN rail power supply

10 W family | 22.5 × 90 × 100 mm



Sample: MDR-10-5

Electrical specifications

Model	MDR-10-5	MDR-10-12	MDR-10-15	MDR-10-24
DC voltage	5 V	12 V	15 V	24 V
DC current range	0–2 A	0–0.84 A	0–0.6 A	0–0.42 A
Efficiency	77%	81%	82%	84%
Ripple and noise	80 mV p-p	120 mV p-p	120 mV p-p	150 mV p-p
Line regulation	±1%	±1%	±1%	±1%
Load regulation	±1%	±1%	±1%	±1%
DC voltage adjustment	±2%	±1%	±1%	±1%

Input, protection and operating conditions

AC / DC input	85–264 VAC / 120–370 VDC
Input frequency	47–63 Hz
Cold-start inrush	35 A at 115 VAC; 70 A at 230 VAC
Overload protection	105–160%; output cuts off and recovers automatically.
Overvoltage protection	120–140%; output shuts down. Cycle input power to recover.
Setup / rise at full load	500 / 30 ms at 230 VAC; 1000 / 30 ms at 115 VAC.
Hold-up time	Not specified.
Withstand voltage (1 min)	Input/output: 1.5 kV; input/FG: 1.5 kV; output/FG: 0.5 kV.
Insulation resistance	100 MΩ at 500 VDC: input/output, input/FG and output/FG.
Working temperature	−10 °C to +50 °C
Unit weight	0.17 kg
Packing	45.5 × 31.5 × 23 cm / 90 pcs / 16 kg

The wattage in the heading identifies the family; use the selected output column to size the load.

Mechanical dimensions

22.5 × 90 × 100 mm / dimensions in millimetres

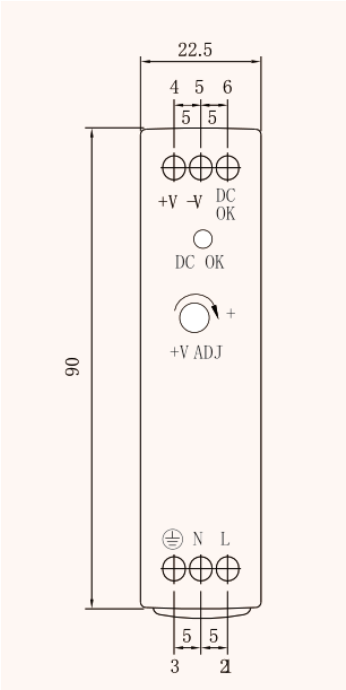

Front view

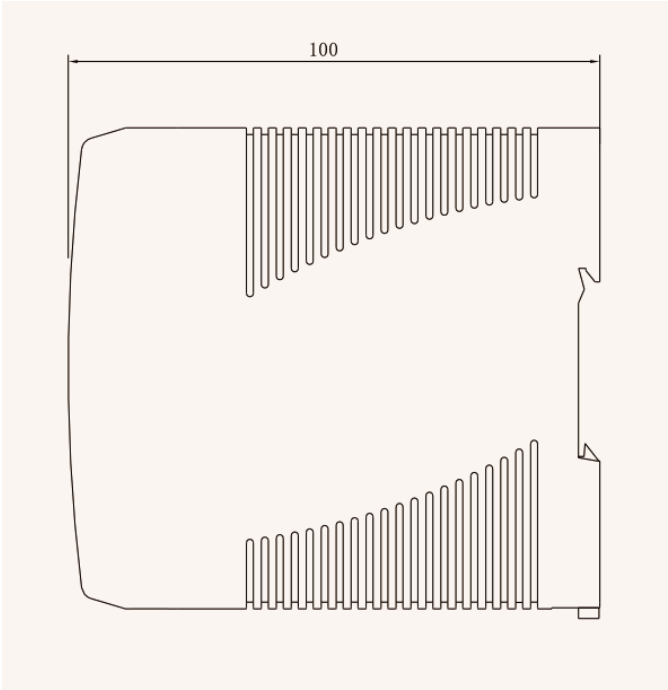

Side view

Mounting and connections

Rail: TS35/7.5 or TS35/15. Allow additional space for cable routing and servicing.

Pin group 1, 2: AC input | 3: Ground | 4: +V | 5: −V | 6: DC OK

Use the markings and the correct version instructions; the AC legend does not specify DC input polarity.

DC OK interface

Minimum resistance values for the three signal-circuit examples on the manufacturer sheet:

Model	MDR-10-5	MDR-10-12	MDR-10-15	MDR-10-24
5 V signal: minimum R	200 Ω	1.5 kΩ	2 kΩ	3.9 kΩ
LED example: minimum R	1 kΩ	2.4 kΩ	3 kΩ	4.7 kΩ
Relay example: minimum RL	120 Ω	700 Ω	700 Ω	1.2 kΩ

These examples do not specify the rating of a built-in relay contact.