MDR-100

Single-output DIN rail power supply

100 W family | 55 × 90 × 100 mm



Sample: MDR-100-24

Electrical specifications

Model	MDR-100-12	MDR-100-24	MDR-100-36	MDR-100-48
DC voltage	12 V	24 V	36 V	48 V
DC current range	0–7.5 A	0–4.16 A	0–2.7 A	0–2 A
Efficiency	78%	86%	88%	88%
Ripple and noise	120 mV p-p	150 mV p-p	150 mV p-p	200 mV p-p
Line regulation	±1%	±1%	±1%	±1%
Load regulation	±1%	±1%	±1%	±1%
DC voltage adjustment	±1%	±1%	±1%	±1%

Input, protection and operating conditions

AC / DC input	85–264 VAC / 120–370 VDC
Input frequency	47–63 Hz
Cold-start inrush	30 A at 115 VAC; 60 A at 230 VAC
Overload protection	105–150%; output cuts off and recovers automatically.
Overvoltage protection	120–140%; output shuts down. Cycle input power to recover.
Setup / rise at full load	3000 / 50 ms at 230 VAC; 3000 / 50 ms at 115 VAC.
Hold-up time	Not specified.
Withstand voltage (1 min)	Input/output: 1.5 kV; input/FG: 1.5 kV; output/FG: 0.5 kV.
Insulation resistance	100 MΩ at 500 VDC: input/output, input/FG and output/FG.
Working temperature	−10 °C to +50 °C
Unit weight	0.42 kg
Packing	Not specified (/)

The wattage in the heading identifies the family; use the selected output column to size the load.

Mechanical dimensions

55 × 90 × 100 mm / dimensions in millimetres

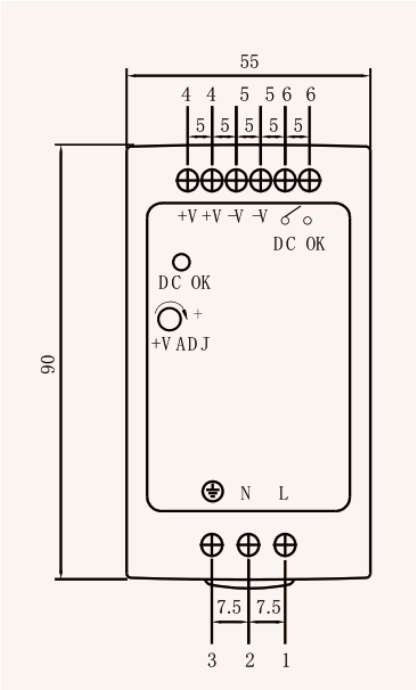

Front view

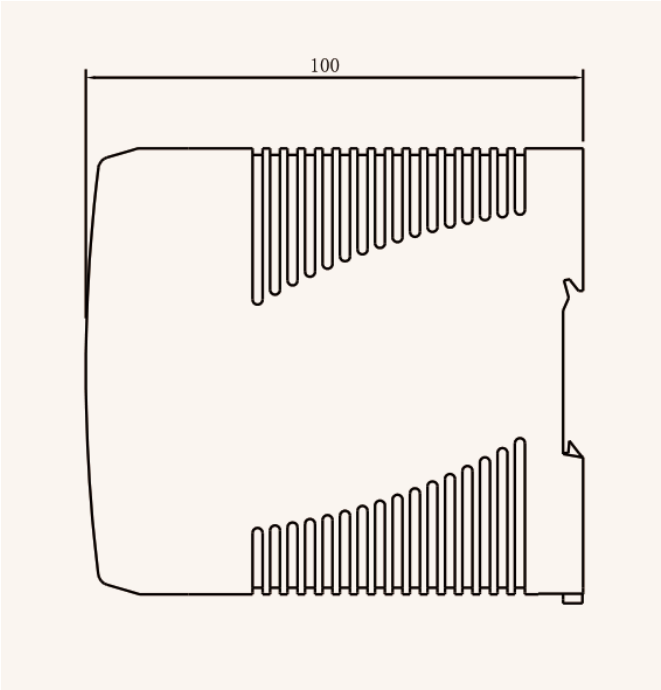

Side view

Mounting and connections

Rail: TS35/7.5 or TS35/15. Allow additional space for cable routing and servicing.

Pin group 1, 2: AC input | 3: Ground | 4: +V | 5: −V | 6: DC OK

Use the markings and the correct version instructions; the AC legend does not specify DC input polarity.

DC OK interface

Contact state	Indication
Closed	Input power on / DC normal
Open	Input power off / DC fault
Contact maximum	30 V / 1 A, resistive load

The contact is for status monitoring; it is not a second regulated power output.