S-15 Series

15 W single-output switching power supply

Output options

5 V, 12 V, 15 V or 24 V DC; select one model.

01 Output ratings

Model	S-15-5	S-15-12	S-15-15	S-15-24
DC output voltage	5 V	12 V	15 V	24 V
Output current	0-3 A	0-1.3 A	0-1 A	0-0.7 A
Efficiency	65%	68%	70%	72%
Ripple / noise (mV p-p)	50	50	75	100
Line regulation	±0.5%	±0.5%	±0.5%	±0.5%
Load regulation	±1%	±0.5%	±0.5%	±0.5%
DC voltage adjustment	±10%	±10%	±10%	±10%

Use the current for the selected output voltage; the options are different models.

02 Input, protection and insulation

Input voltage	90-132 V AC or 180-264 V AC (by switch); 254-370 V DC; 47-63 Hz
Inrush current	15 A at 115 V AC; 30 A at 230 V AC (cold start)
Overload protection	105-150%: output shuts off; automatic recovery.
Overvoltage protection	115-135%: output shuts off; cycle input power to recover.
Setup / rise / hold-up	200 / 100 / 30 ms at 230 V AC, full load.
Withstand voltage	Input-output: 1.5 kV; input-FG: 1.5 kV; output-FG: 0.5 kV (1 min).
Insulation resistance	100 megohms at 500 V DC: input-output, input-FG and output-FG.

03 Operating and mechanical data

Operating temperature	-10 to +50 °C
Dimensions (L × W × H)	98 × 97 × 35 mm
Unit weight	0.3 kg
Packing	43 × 32.5 × 24 cm; 60 units per carton; 18 kg per carton

S-15 mechanical dimensions

98 × 97 × 35 mm (length × width × height)

Wide face

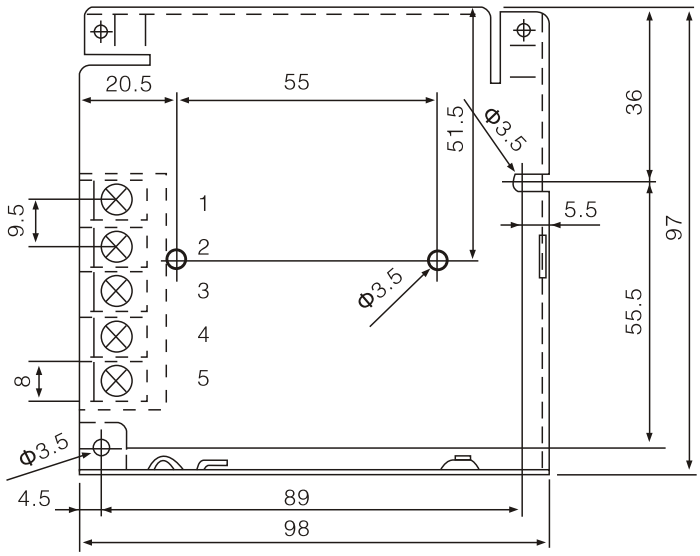

Narrow face

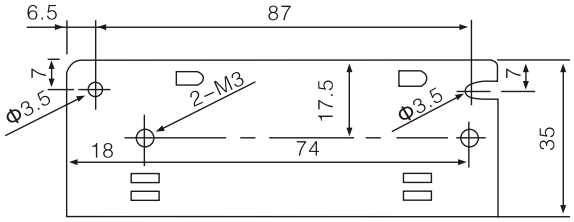

Terminal pin assignment

Pin 1	DC output +V
Pin 2	DC output -V
Pin 3	Protective earth (FG)
Pins 4, 5	AC input

Drawing dimensions are in millimetres. Pin numbers refer to the terminal strip on the wide face.

Mounting reference

Use the labelled dimensions rather than measuring the drawing on screen or in print.

Allow clearance beyond the case for insulated cables and terminal access.

Terminal identification

The drawing groups pins 4 and 5 as AC input; it does not assign L and N individually.

Check the markings on the actual unit before installation.