S-201 Series

200 W / Single-output switching power supply

Output options: 5, 12, 15, 24, 36, 48 V DC

Choose the column for the complete output model.

01 Output ratings

Model	S-201-5	S-201-12	S-201-15	S-201-24	S-201-36	S-201-48
DC output voltage	5 V	12 V	15 V	24 V	36 V	48 V
Output current	0-40 A	0-16.5 A	0-13.4 A	0-8.3 A	0-5.5 A	0-4.2 A
Efficiency	74%	80%	80%	83%	84%	84%
Ripple / noise (mV p-p)	150	150	150	150	240	240
Line regulation	±0.5%	±0.5%	±0.5%	±0.5%	±0.5%	±0.5%
Load regulation	±1%	±0.5%	±0.5%	±0.5%	±0.5%	±0.5%
DC voltage adjustment	±10%	±10%	±10%	±10%	±10%	±10%

The source heading reads S-201W; its power summary states 200 W.

02 Input, protection and insulation

Input voltage	90-132 V AC or 180-264 V AC (by switch); 254-370 V DC; 47-63 Hz
Inrush current	25 A at 115 V AC; 50 A at 230 V AC (cold start)
Overload protection	105-135%: output shuts off; automatic recovery.
Overvoltage protection	115-145%: output shuts off; cycle input power to recover.
Setup / rise / hold-up	200 / 100 / 20 ms at 230 V AC, full load.
Withstand voltage	Input-output: 1.5 kV; input-FG: 1.5 kV; output-FG: 0.5 kV (1 min).
Insulation resistance	100 megohms at 500 V DC: input-output, input-FG and output-FG.

03 Operating and mechanical data

Operating temperature	-10 to +50 °C
Dimensions (L × W × H)	215 × 115 × 50 mm (case); see mounting span on page 2.
Unit weight	0.9 kg
Packing	45.5 × 31.5 × 26 cm; 20 units per carton; 18 kg per carton

S-201 mechanical dimensions

215 × 115 × 50 mm (length × width × height)

Wide face

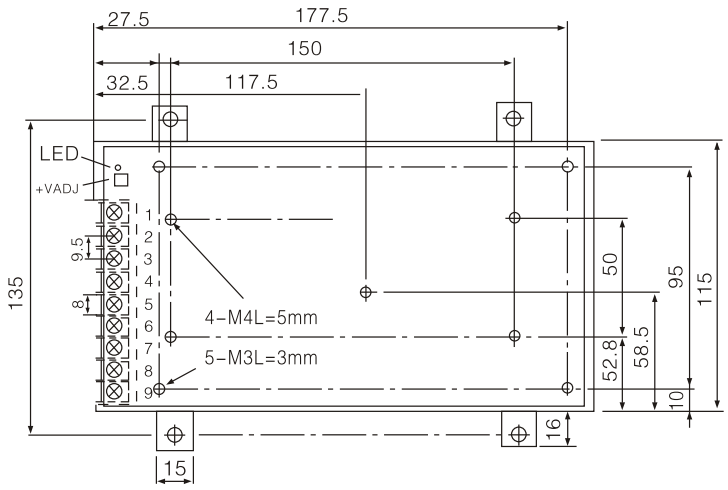

Narrow face

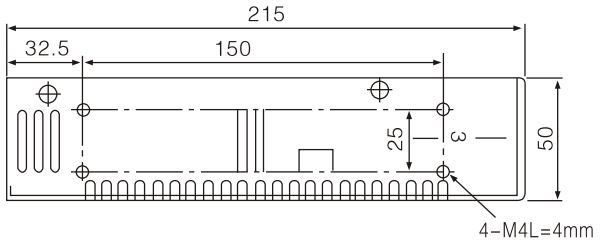

Terminal pin assignment

Pins 1, 2, 3	DC output +V
Pins 4, 5, 6	DC output -V
Pin 7	Protective earth (FG)
Pins 8, 9	AC input

Terminal identification

The source groups the AC input pins. Check L and N on the unit; the legend does not identify them individually.

Mounting reference

The 135 mm dimension spans the mounting-ear hole centres. It is not the 115 mm body width.

Dimensions are in millimetres. Check the markings on the actual unit before installation.