S-320 Series

320 W / Single-output switching power supply

Output options: 12, 24, 36, 48 V DC

Choose the column for the complete output model.

01 Output specifications

Model	S-320-12	S-320-24	S-320-36	S-320-48
DC output voltage	12 V	24 V	36 V	48 V
DC output current	0-26.6 A	0-13.3 A	0-8.9 A	0-6.6 A
Efficiency	83%	85%	85%	86%
Ripple and noise	150 mV p-p	150 mV p-p	150 mV p-p	200 mV p-p
Line regulation	±0.5%	±0.5%	±0.5%	±0.5%
Load regulation	±0.5%	±0.5%	±0.5%	±0.5%
DC voltage adjustment	±10%	±10%	±10%	±10%

02 Operating conditions

AC input	90-132 / 180-264 V AC, switch-selected; 47-63 Hz
DC input	254-370 V DC
Cold-start inrush	25 A at 115 V AC; 50 A at 230 V AC
Overload protection	105-135%: output shuts off; automatic recovery
Overvoltage protection	115-150%: output shuts off; cycle input power to recover
Setup / rise / hold-up time	200 / 50 / 20 ms at 230 V AC, full load
Withstand voltage	Input-output: 1.5 kV; input-FG: 1.5 kV; output-FG: 0.5 kV (1 minute)
Insulation resistance	100 megohms at 500 V DC (input-output, input-FG, output-FG)
Operating temperature	-10 to +50 °C
Body / unit weight	215 x 115 x 50 mm; 0.9 kg
Carton	45.5 x 31.5 x 26 cm; 20 units; 18 kg

Mechanical reference

The 135 mm dimension spans the mounting-ear hole centres. It is not the 115 mm body width.

S-320 mechanical dimensions

215 × 115 × 50 mm (length × width × height)

Wide face

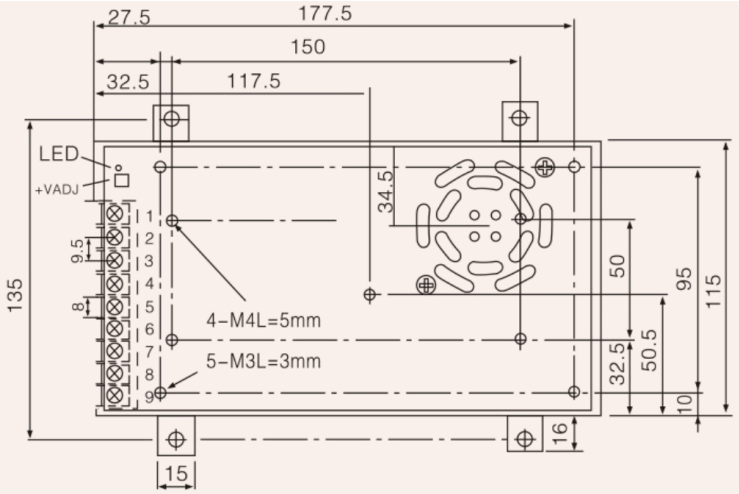

Narrow face

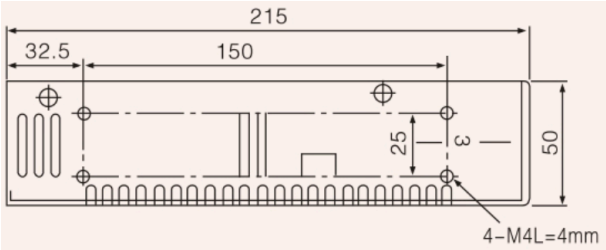

Terminal pin assignment

Pins 1, 2, 3	DC output +V
Pins 4, 5, 6	DC output -V
Pin 7	Protective earth (FG)
Pins 8, 9	AC input

Terminal identification

The source groups the AC input pins. Check L and N on the unit; the legend does not identify them individually.

Mounting reference

The 135 mm dimension spans the mounting-ear hole centres. It is not the 115 mm body width.

Dimensions are in millimetres. Check the markings on the actual unit before installation.