# S-35 Series

35 W / Single-output switching power supply

**Output options: 5, 12, 15, 24 V DC**

Choose the column for the complete output model.

## 01 Output ratings

| Model | S-35-5 | S-35-12 | S-35-15 | S-35-24 |
|---|---|---|---|---|
| DC output voltage | 5 V | 12 V | 15 V | 24 V |
| Output current | 0-7 A | 0-3 A | 0-2.4 A | 0-1.5 A |
| Efficiency | 70% | 76% | 78% | 78% |
| Ripple / noise (mV p-p) | 70 | 100 | 100 | 100 |
| Line regulation | ±0.5% | ±0.5% | ±0.5% | ±0.5% |
| Load regulation | ±1% | ±0.5% | ±0.5% | ±0.5% |
| DC voltage adjustment | ±10% | ±10% | ±10% | ±10% |

Use the current for the selected output voltage; the options are different models.

## 02 Input, protection and insulation

| | |
|---|---|
| **Input voltage** | 90-132 V AC or 180-264 V AC (by switch); 254-370 V DC; 47-63 Hz |
| **Inrush current** | 18 A at 115 V AC; 36 A at 230 V AC (cold start) |
| **Overload protection** | 105-150%: output shuts off; automatic recovery. |
| **Overvoltage protection** | 115-135%: output shuts off; cycle input power to recover. |
| **Setup / rise / hold-up** | 200 / 100 / 30 ms at 230 V AC, full load. |
| **Withstand voltage** | Input-output: 1.5 kV; input-FG: 1.5 kV; output-FG: 0.5 kV (1 min). |
| **Insulation resistance** | 100 megohms at 500 V DC: input-output, input-FG and output-FG. |

## 03 Operating and mechanical data

| | |
|---|---|
| **Operating temperature** | -10 to +50 °C |
| **Dimensions (L × W × H)** | 129 × 98 × 38 mm |
| **Unit weight** | 0.4 kg |
| **Packing** | 43 × 32.5 × 24 cm; 45 units per carton; 18 kg per carton |

# S-35 mechanical dimensions

129 × 98 × 38 mm  (length × width × height)

## Wide face

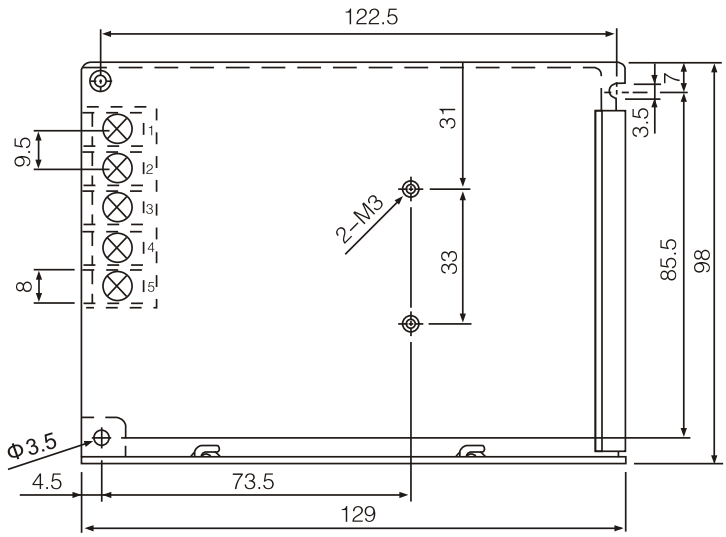


## Narrow face

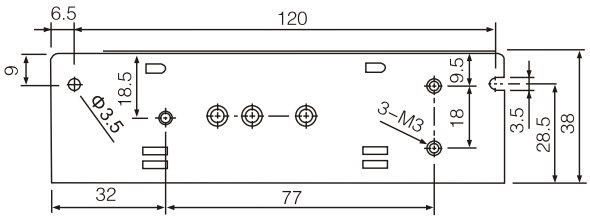


### Terminal pin assignment

| | |
|---|---|
| **Pins 1, 2** | AC input |
| **Pin 3** | Protective earth (FG) |
| **Pin 4** | DC output -V |
| **Pin 5** | DC output +V |

## Terminal identification

The source groups the AC input pins. Check L and N on the unit; the legend does not identify them individually.

## Mounting reference

Use the printed dimensions, not the scale of the drawing, for mounting reference.

Dimensions are in millimetres. Check the markings on the actual unit before installation.