S-60 Series

60 W / Single-output switching power supply

Output options: 5, 12, 15, 24 V DC

Choose the column for the complete output model.

01 Output ratings

Model	S-60-5	S-60-12	S-60-15	S-60-24
DC output voltage	5 V	12 V	15 V	24 V
Output current	0-12 A	0-5 A	0-4 A	0-2.5 A
Efficiency	72%	78%	79%	82%
Ripple / noise (mV p-p)	75	100	100	100
Line regulation	±0.5%	±0.5%	±0.5%	±0.5%
Load regulation	±1%	±0.5%	±0.5%	±0.5%
DC voltage adjustment	±10%	±10%	±10%	±10%

Use the current for the selected output voltage; the options are different models.

02 Input, protection and insulation

Input voltage	90-132 V AC or 180-264 V AC (by switch); 254-370 V DC; 47-63 Hz
Inrush current	15 A at 115 V AC; 30 A at 230 V AC (cold start)
Overload protection	105-150%: output shuts off; automatic recovery.
Overvoltage protection	115-135%: output shuts off; cycle input power to recover.
Setup / rise / hold-up	200 / 100 / 20 ms at 230 V AC, full load.
Withstand voltage	Input-output: 1.5 kV; input-FG: 1.5 kV; output-FG: 0.5 kV (1 min).
Insulation resistance	100 megohms at 500 V DC: input-output, input-FG and output-FG.

03 Operating and mechanical data

Operating temperature	-10 to +50 °C
Dimensions (L × W × H)	159 × 98 × 38 mm
Unit weight	0.5 kg
Packing	34 × 32 × 24 cm; 30 units per carton; 15 kg per carton

S-60 mechanical dimensions

159 × 98 × 38 mm (length × width × height)

Wide face

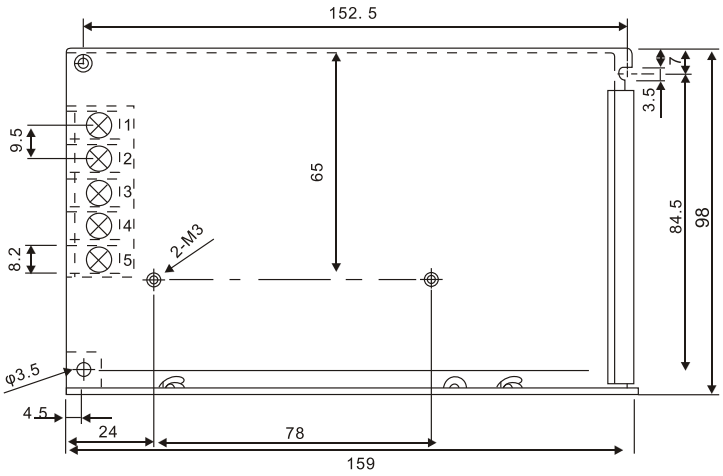

Narrow face

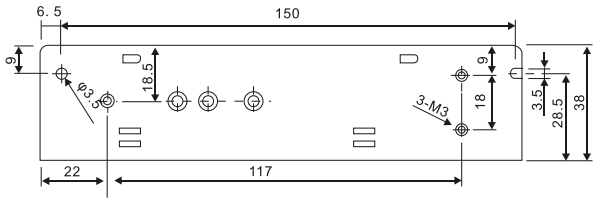

Terminal pin assignment

Pins 1, 2	AC input
Pin 3	Protective earth (FG)
Pin 4	DC output -V
Pin 5	DC output +V

Terminal identification

The source groups the AC input pins. Check L and N on the unit; the legend does not identify them individually.

Mounting reference

Use the printed dimensions, not the scale of the drawing, for mounting reference.

Dimensions are in millimetres. Check the markings on the actual unit before installation.